REVISIONS				
LOC	LTR	DESCRIPTION	DATE	APPROVED

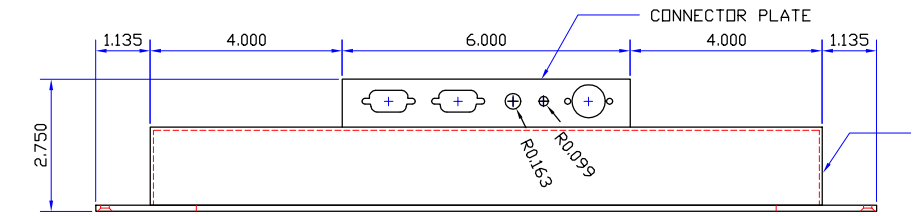

TOP VIEW

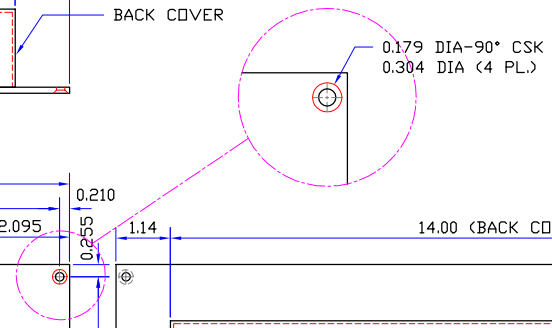

-X	DASH # DESCRIPTION
-1	WITHOUT LOGO
-2	WITH CYBERTOUCH LOGO (D. GRAY)
-3	WITH CUSTOMER LOGO

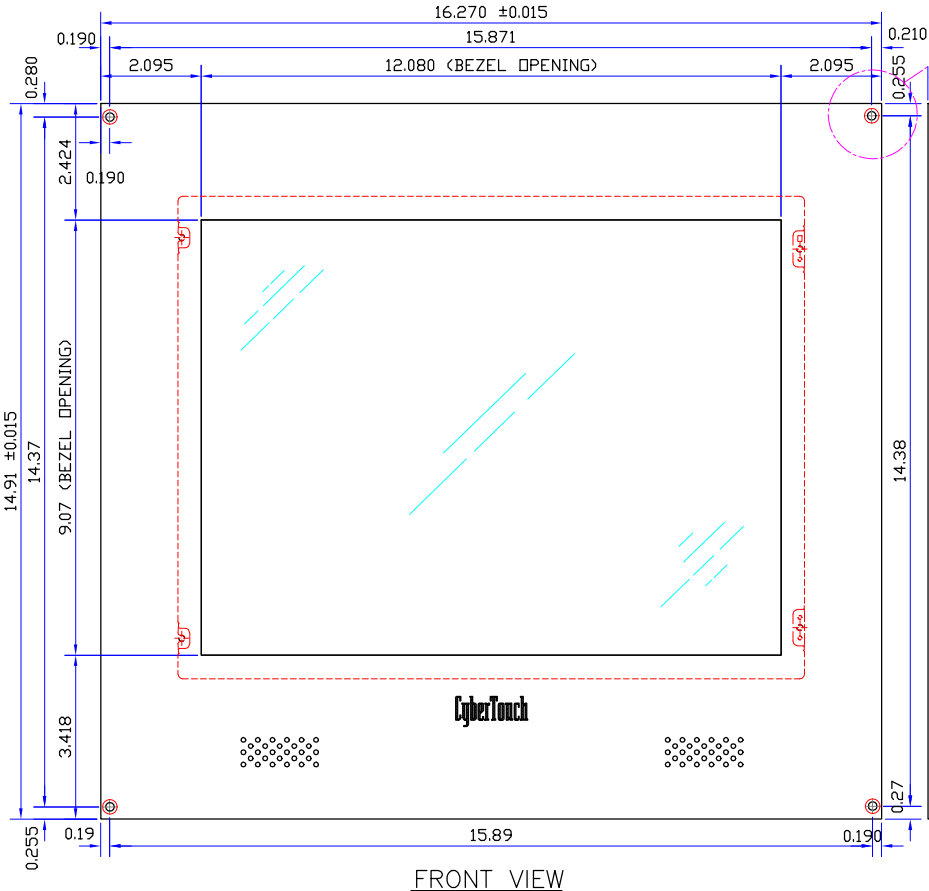

FRONT VIEW

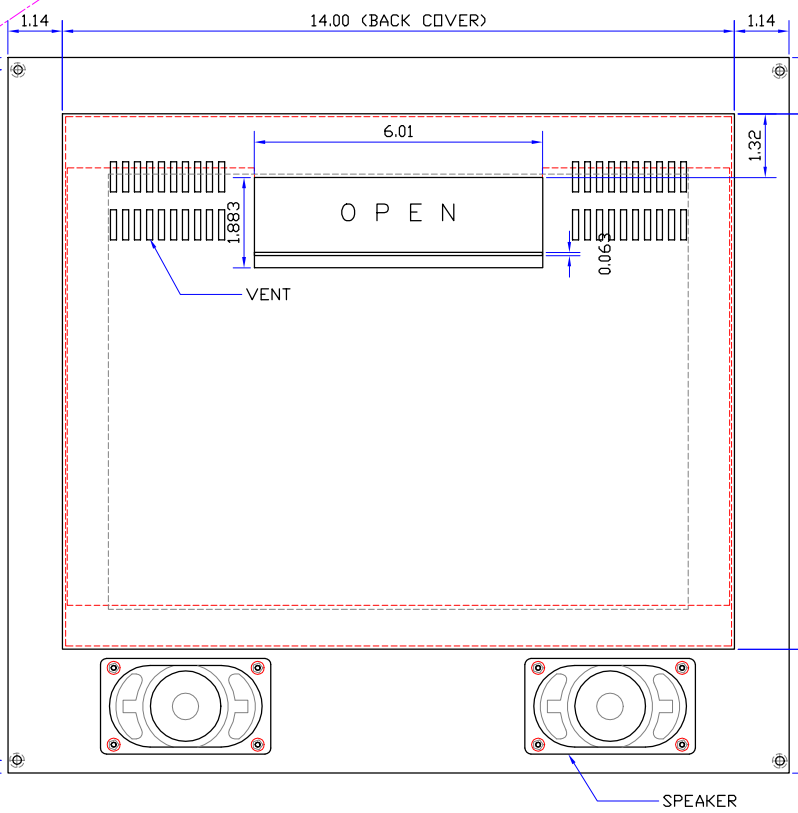

REAR VIEW

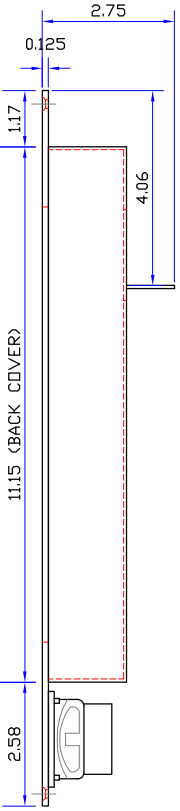

SIDE VIEW

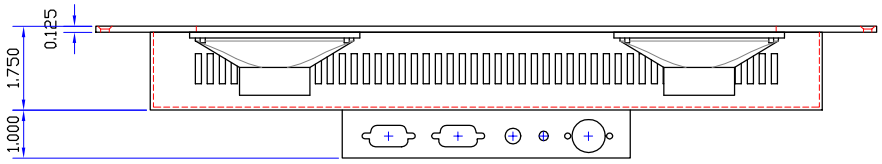

BOTTOM VIEW

THIS DRAWING AND THE DESIGN SHOWN THEREBY IS THE PROPERTY OF CyberTouch ITS DISCLOSURE AND DISTRIBUTION IS FOR A LIMITED PURPOSE ONLY; ANY USE BEYOND SUCH LIMITATION IS NOT AUTHORIZED. NO REPRODUCTION THEREOF IS LISCENSED, BEYOND THE LIMITED PURPOSE FOR WHICH THE DRAWING IS SUPPLIED. THIS DRAWING AND ALL COPIES THEREOF SHALL REMAIN THE PROPERTY OF CyberTouch AND MUST BE RETURNED TO CyberTouch ON REQUEST

APPROVALS			
DATE	REV.	INITS.	
		ENG.	
		ADL.	
		MAN.	
		Q.A.	
CUSTOMER APPROVAL			

TOLERANCES UNLESS OTHERWISE SPECIFIED
.X .XX .XXX
±.15 ±.010 ± .005

APPROVALS	DATE
DESIGN A. GOHARI	042805
CAD N. FRANCISCO	042805

CyberTouch
Touch Screens.Touch Monitors.Touch Systems
(805)499-5000
www.cybertouchusa.com

TITLE
ECLIPSE 5
15.0" DIAG. TOUCH LCD

SCALE 1:0.25
PART NO. 8504-XX-0A-X
SHEET 1 OF 1