REVISIONS				
LOC	LTR	DESCRIPTION	DATE	APPROVED

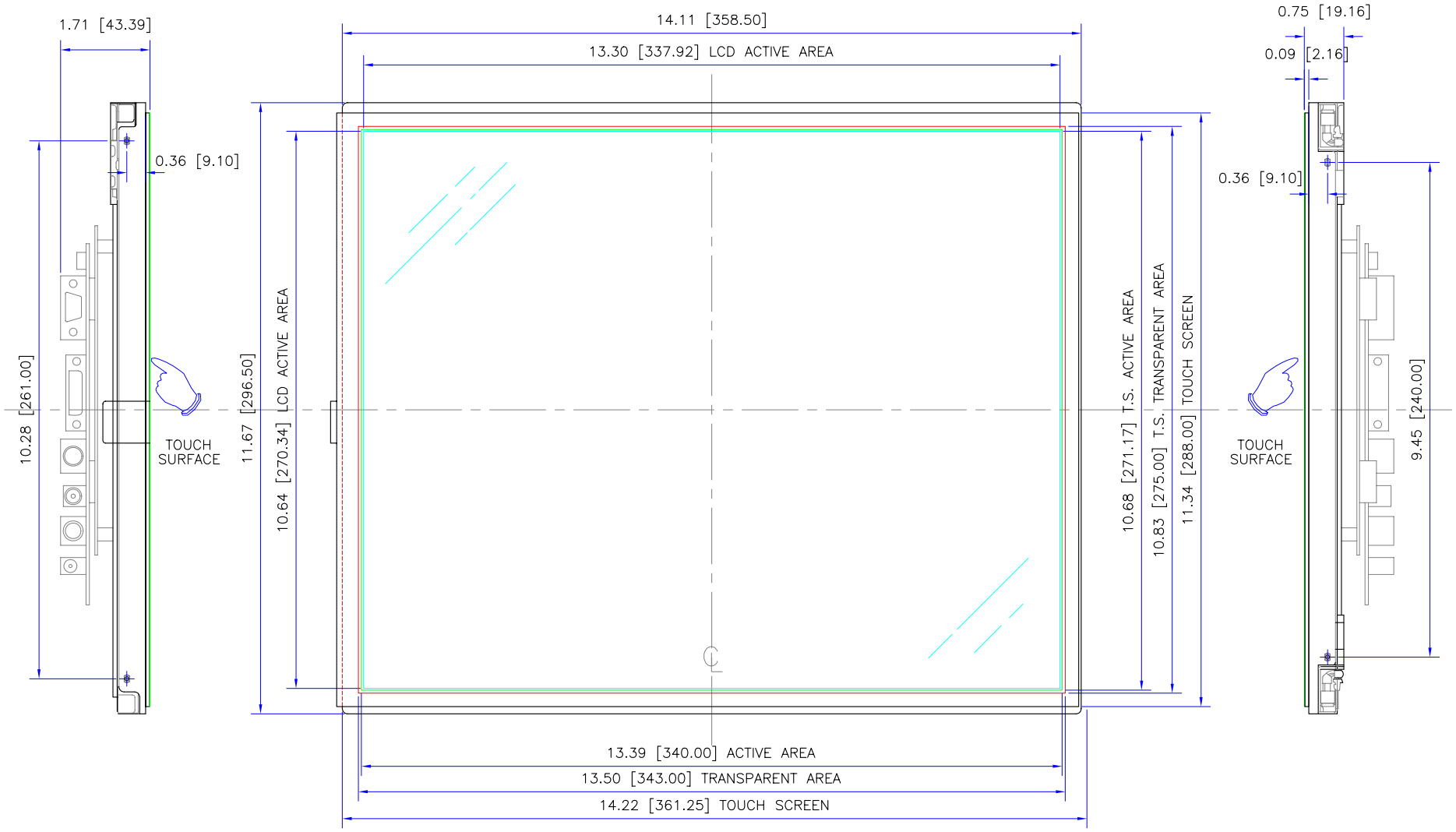

THIS DRAWING AND THE DESIGN SHOWN THEREBY IS THE PROPERTY OF CyberTouch ITS DISCLOSURE AND DISTRIBUTION IS FOR A LIMITED PURPOSE ONLY; ANY USE BEYOND SUCH LIMITATION IS NOT AUTHORIZED; NO REPRODUCTION THEREOF IS LISCENSED, BEYOND THE LIMITED PURPOSE FOR WHICH THE DRAWING IS SUPPLIED. THIS DRAWING AND ALL COPIES THEREOF SHALL REMAIN THE PROPERTY OF CyberTouch AND MUST BE RETURNED TO CyberTouch ON REQUEST

APPROVALS			
DATE	REV.	INITS.	
		ENG.	
		ADL.	
		MAN.	
		Q.A.	
CUSTOMER APPROVAL			

TOLERANCES UNLESS OTHERWISE SPECIFIED

.X	.XX	.XXX
±.15	±.010	± .005

APPROVALS	DATE
DESIGN A. GOHARI	120706
CAD N. FRANCISCO	120706

CyberTouch

Touch Screens.Touch Monitors.Touch Systems
(805)499-5000
www.cybertouch.com

TITLE

SOLA 17 LCD/TOUCH SCREEN

SCALE	PART NO.
1:0.35	8260-AC-0A

SHEET 1 OF 1